Holiday World Show

DUBLIN

Dates: January 22/24, 2027
Venue: RDS, Simmonscourt Road
Ballsbridge, Dublin D04 E6N6.
t: +353 (0)1 668 3070
w: rds.ie

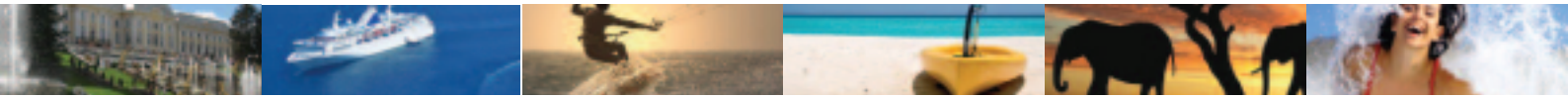

Exhibitors Information Manual

Organised by

Business Exhibitions Limited
59 Rathfarnham Road, Terenure, Dublin D6W AK70, Ireland
t: +353 (0)1 295 7418
www.holidayworldshow.com

BizEx BUSINESS EXHIBITIONS LIMITED

ITAA irish travel agents association

IMPORTANT
PLEASE CHECK PAGE 3
FOR CRITICAL DEADLINES

www.holidayworldshow.com

Contents

IMPORTANT - Check List and Important Dates	**3**
Venue/Dates/Times/Exhibitor Badges/Car Park Passes	**4**
Contacts/Directions/Accommodation	**5**
Shell Scheme Stands Explained	**6**
Official Contractors	**7/8**
FAQ's	**9/16**
Order Forms	**17/34**
• Stand Booking Form	17
• Furniture	18
• Fitments	19
• Graphic Order Form	20
• Furniture & Graphic Examples	21
• Shelving	22
• Additional Electrics	23/24
• TV/Monitor	25
• Water Supply and Plumbing	26
• Floral Decoration	27
• Fork Lift Facilities	28
• WiFi & Internet Connection	29
• Rigging Requirements Form	30
• RDS Sampling Policy Form	31/32
• Risk Assessment Form	33/34
Rules and Regulations	**35/38**
30 Secrets to Exhibiting Success	**39**

IMPORTANT - READ ME FIRST!

Checklist and Important Dates

Exhibitor Badges will be available from the Organiser's Office from January 21st.

Deadline Date	Description	Page No	Action Taken
Act now	Return Stand Booking Form including Name Panel (Shell Scheme Exhibitors only)	**17**	
Act now	Find out what is included in your Stand	**6**	
Act now	Send list of Stand Partners. Each Partner will be listed in the Official Catalogue	**17**	
Act now	Book Travel and Accommodation	**5**	
Act now	Seek sponsorship opportunities	**14**	
Dec 01	4 Options to pre-promote your presence at the Show	**12**	
Dec 01	Return the following Order Forms		
	Furniture	**18**	
	Stand Fitments	**19**	
	Graphic Order Form	**20**	
	Shelving	**22**	
	Additional Electrics	**23/24**	
	AV Requirements	**25**	
	Water Supply and Plumbing	**26**	
	Floral Decoration	**27**	
	Forklift Facilities	**28**	
	WiFi and Internet Connections	**29**	
	Rigging Requirements	**30**	
	RDS Sampling Policy	**31/32**	
	Risk Assessment Form	**33/34**	
Dec 01	Take out insurance cover	**10**	
Dec 01	If you are building your own stand, send drawings for approval	**16**	
Dec 01	Organise Staff Training	**14**	
Dec 01	Book Freight Forwarder		
Dec 01	Make final stand payment		
Dec 01	Prepare stand graphics, flyers, brochures, giveaways etc		
Dec 01	Plan post-show follow-up activities		
Jan 23	All stands should be completed by 6.00pm		
Jan 24	Press Office opens - located top right corner of Exhibition Hall Exhibitors Lounge opens - located on the first floor beside Organisers Office		

If an Exhibitor has a problem during the Show which cannot be resolved by the appropriate service contractor, the Exhibitor should come to the Organisers Office for assistance. All too often, the Exhibitor will write after the Show about a problem which could have been corrected at the time it occured.

Venue/Date/Times

VENUE

RDS, Simmonscourt, Ballsbridge, Dublin D04 E6N6

DATE AND TIMES

Friday	January 22	9.30am - 12.30pm	Trade Only
Friday	January 22	12.30pm - 5.00pm	Trade and Public
Saturday	Janaury 23	10.00am - 5.00pm	Trade and Public
Sunday	Janaury 24	10.00am - 5.00pm	Trade and Public

BUILD-UP TIMES

SPACE ONLY EXHIBITORS

Wednesday	January 20	1.00pm	9.00pm
Thursday	January 21	8.00am	9.00pm

SHELL EXHIBITORS

Thursday	January 21	2.00pm	9.00pm

DISMANTLING TIMES

Sunday	January 24	6.00pm	10.00pm
Monday	January 25	8.00am	2.00pm

Clearance of exhibits may begin once the show has closed on Sunday January 24th. It is not possible to provide effective security during the dismantling of the Show. We would ask you to remove products, dressing, equipment etc. before leaving on Sunday evening. Only heavy goods should be left for collection on Monday. Ensure that you have organised forklift facility, if required.

EXHIBITOR BADGES/CAR PARK PASSES

On arrival at RDS Simmonscourt please call to the Exhibition Organiser's Office and collect your Exhibitor Badges and Car Park Passes.

GENERAL ENQUIRIES

BEFORE SHOW

Business Exhibitions Ltd., 59 Rathfarnham Road, Dublin D6W AK70
t: +353 (0)1 295 7418
e: shane@bizex.ie

DURING SHOW

Organisers Office, RDS Simmonscourt, Ballsbridge, Dublin D04 E6N6
t: +353 (0)1 668 3070
e: shane@bizex.ie

BANK DETAILS

AIB Bank, 60 Clonskeagh Road, Dublin 14
A/C Name: Business Exhibitions Ltd.
IBAN: IE66 AIBK 9311 8713 0040 08 SWIFT: AIBKIE2D

Contact Us

CONTACTS

		Direct Line	email
Angela O'Rourke	Sales Executive	+353 (0)1 291 3705	angela@bizex.ie
Maria Hourican	CEO	+353 (0)1 291 3707	maria@bizex.ie
Shane Hourican	Sales Manager	+353 (0)87 255 1675	shane@bizex.ie

ORGANISERS

Business Exhibitions Limited
59 Rathfarnham Road
Dublin D6W AK70
t: +353 (0)1 295 7418
w: www.holidayworldshow.com

TAXI NUMBERS

+353 (0)1 628 9999 Ballsbridge Taxis
+353 (0)1 478 3333 VIP Taxis
+353 (0)1 437 2092 Stillorgan Cabs

PRESS OFFICE

Located at the top right hand corner of the Exhibition Hall.

EXHIBITORS' LOUNGE

The entrance door to the Exhibitor's Lounge is located beside the organiser's office. It will be open from 11.00am on Saturday & Sunday.

ACCOMMODATION

Special Exhibitor Rates have been organised with:
The Clayton Hotel Ballsbridge
Promotion Code to use is HOLI210127.Book online at www.claytonhotelballsbridge.com using the Promotion Code or contact: reservations.ballsbridge@claytonhotels.com and mention the promotion code to avail of the agreed rate.
or
Sandymount Hotel
Bookable on www.sandymounthotel.ie or call us on +353 1 6142000 for reservations and use Code HWS2027 to avail of their exclusive exhibitor rates.

HOW TO GET TO THE RDS

Log onto www.rds.ie for maps, full directions and public transport details.

Shell Scheme Stand - what's included

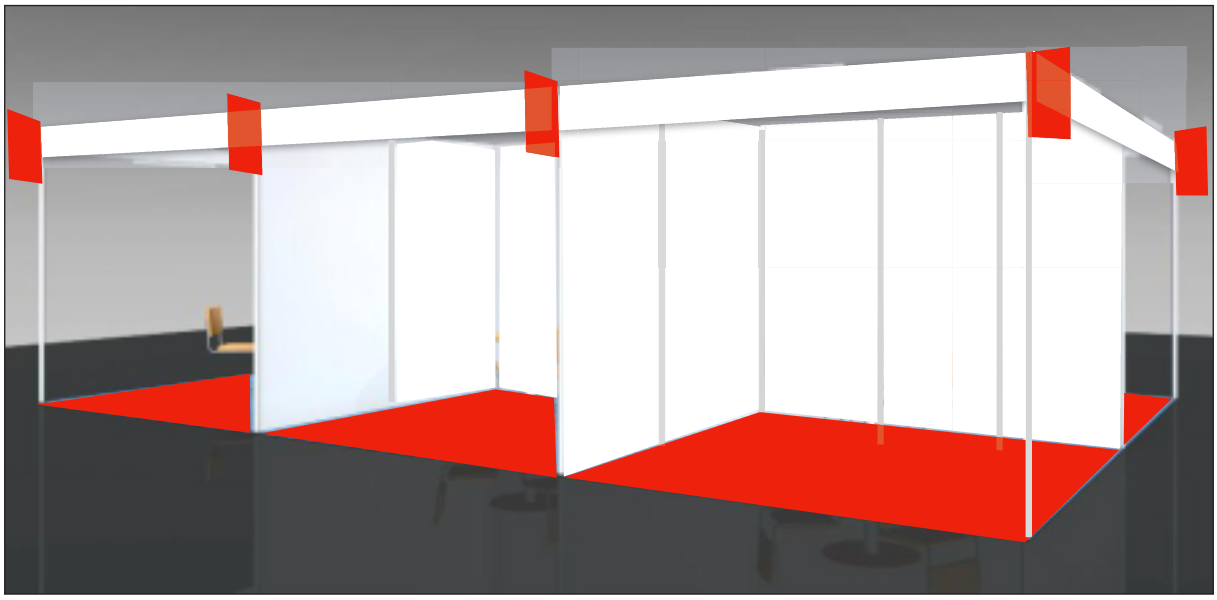

- Divider Walls
- One 150 watt Spotlight per 6 sq m (min 2)
- Carpet
- Name Panel
- Night Security
- Stand Cleaning
- Catalogue Entry for each brand
- Services of Press Office

What is not included in a Shell Scheme Stand

- Stand Furniture
- Power Socket

To order furniture or electrics log into your Exhibitor area on www.holidayworldshow.com or complete the forms contained in this manual and return to shane@bizex.ie.

Panels Fixing Exhibits

- The use of nails, screws, staples, etc., is not permitted to the standard wall panels. When fixing exhibits to White Foamex Panels, use two-part Velcro, Blu Tack or double-sided sticky pads can be used to fix light exhibits.
- Heavier display items, smaller than 1 metre wide, can be hung from the top of the stand walls using picture wire and hooks
- Please note that between each wall panel there is an upright pole giving a 20mm protrusion from the infill panel, which means that, displays wider than 950mm will not fit flush to the stand walls. For items wider than 990mm, fixing clips can be supplied.
- Octanorm is a very versatile system which can be enhanced WITH A RANGE OF OPTIONAL EXTRAS to create a professional stand for displaying your products and making you stand out from the competition. These OPTIONAL EXTRA include graphics, stand furniture, stand storeroom, shelving, literature dispensers, counters etc.

To learn more contact Tony O'Brien, Managing Director
O'Brien Expo Services Ltd.,
The Coach House, 1 Warwick Terrace, Appian Way, Ranelagh, Dublin 6.
t +353 (0)1 614 4700
m +353 (0)87 249 2489
e tony@obexpo.ie

OFFICIAL CONTRACTORS

Permission must be sought from the Organisers to use a contractor other than the official contractors listed below.

WI-FI/WIRED INTERNET CONNECTION

RDS VENUE., Ballsbridge, Dublin D04 AK83
t: +353 (0) 1 668 0866 e: events.it@rds.ie
Contact: James Hallam, Head of ITE Infrastructure and Ops

AUDIO VISUAL

AV PARTNERS, 33 Robinhood Ind Estate, Dublin D22 K4H2
t: +353 (0)85 263 7556 e: info@avpartners.ie w: www.avpartners.ie
Contact: Alan Finn - Managing Director

CATERING

RDS HOSPITALITY, Royal Dublin Society, Ballsbridge, Dublin D04 E6N6.
If you require catering to your stand please email or call RDS Hospitality
The official caterers at this Show have the sole right to provide food and drink (alcohol or otherwise) for consumption on stands and in offices. Except by written permission of the caterers, no company or individual may bring any food or drink into the Show for distribution. Please contact caterers direct for prices.
RDS SAMPLING POLICY: Please complete the Form on Page 31/32 if you intend to provide food/drink on your stand.

ELECTRICAL

MULVANEY & FLANAGAN ELECTRICAL, Unit 8 Sunshine Ind Estate, Crumlin, Dublin 12
t: +353 (0)1 453 7422/442 e:mulvaneyandflanagan@gmail.com
Contact: David Orange m: +353 (0)87 250 4060

STAND CONSTRUCTION - APPROVED CONTRACTORS

OBRIEN EXPO SERVICES LTD., The Coach House, 1 Warwick Terrace, Appian Way, Dublin 6
t: +353 (0)1 614 4700 e: tony@obexpo.ie
Contact: Tony O'Brien, Managing Director m: +353 (0)87 249 2489

W DISPLAY LTD., Unit 12 & 13 Crumlin Business Centre, Stanaway Drive, Crumlin, Dublin 12
Contact: Mr Ronnie Smith m: +353 (0)87 251 4660

STAND CLEANING

SOUTHSIDE CONTRACT CLEANING, 33 North Summer Street, Dublin 1
t: +353 (0) 1 887 9006 f: +353 (0) 1 887 9655
Contact: Paul Mulhall, Managing Director m: +353 (0)87 806 8431

WATER & WASTE

ALEC O'NEILL, 48c Robinhood Industrial Estate, Dublin 22
e: anoneill@gmail.com
Contact: Alec O'Neill, Managing Director m: +353 (0)87 257 2077

OFFICIAL CONTRACTORS

FLORAL DECORATIONS

PLANT LIFE UNLIMITED, 110/111 Cork Street, Dublin 8
t: +353 (0)1 453 6201 f: +353 (0)1 454 2493 e: info@plantlife.ie
Contact: Sammy Smyth, Managing Director m: +353 (0)86 257 9564

RIGGING

Exhibitors must use our appointed Rigger in order to co-ordinate Rigging Services in the Exhibition Hall.
EMERALD ISLE RIGGING, Unit 4, Cornerpark Farm, Peamount Road, Newcastle, Co Dublin.
t: +353 (0)1 539 2778.....e: niall@emeraldislerigging.ie
Contact: Niall Greene, Rigging Operations t: +353 (0)85 824 4698

FAQ's

BANK DETAILS

AIB Bank, 60 Clonskeagh Road, Dublin D14 Y582
A/C Name: Business Exhibitions Ltd.
IBAN: IE66 AIBK 9311 8713 0040 08
SWIFT: AIBKIE2D

BROCHURE STORAGE

We have a Brochure Storage Area for surplus brochures. Please note that brochures must not be delivered before **Wednesday 20th January, 2027.** When sending your brochures or stand equipment to the Venue please show the correct address, (see below), Exhibitor Name and Stand Number and a contact name and number of the person responsible for the stand. No excess stock, literature or packing cases may be stored on, around or behind your stand.

VENUE ADDRESS:
The Holiday World Show, RDS Simmonscourt Pavillion, Simmonscourt Road, Ballsbridge, Dublin D04 E6N6.

BUSINESS CENTRE

The Business Centre is located in the Organisers Office

CHILDREN

For Health and Safety reasons children under the age of 16 will not be allowed gain entrance to the hall during the build-up or break-down period.

COMPETITION PRIZES

Part of the publicity campaign will involve a series of competitions and special promotions for which we will be offering **'FREE HOLIDAYS'** as prizes. We invite your participation in this scheme and we are accepting offers on a date received basis. The pay-off to the participating Exhibitor is the free listing of the prize and your logo on our website in advance of the show.

CUSTOMS & EXCISE- Non European Community Exhibitors

Arrangements can normally be made for goods to be imported without paying duty, under the Temporary Importation of Goods for Exhibition or Meeting Regulations, as explained in Notice 213. Your forwarding agent will be able to make all the necessary arrangements on your behalf.

The exhibition halls are not a bonded area. Exhibits from non-European Community countries consigned to the hall need clearance by the local Customs Inspector. A minimum of 48 hours notice is required by the Customs and Excise office. Further information should be obtained direct from

Director of Customs & Excise
Wicklow House, South Great Georges Street
Dublin 2
t: +353 (0)1 679 2777

EXHIBITOR BADGES

A reasonable quantity of badges will be supplied to the Exhibitors at the Organiser's Office. These are not transferable and it is requested that special care be exercised to prevent them getting into unauthorised hands.

FAQ's

EXHIBITORS' LOUNGE

The entrance door to the Exhibitor's Lounge is located beside the organiser's office. It will be open from 11.00 am on Saturday & Sunday.

FIRE EXTINGUISHERS

No Exhibitor may light a fire, gas or oil appliance or stove or boiler of any description for any purposes whatsoever, unless he has the authority of the Organisers to do so. Exhibitors using Bottled Gas, Fuel Oil, Petrol, Hay, Straw and other inflammable material must provide in all cases fire extinguishers designed to deal with the risk involved and have the approval of his own insurers of his arrangements. All materials used in the decoration of the Stands, of offices therein, must be non flammable.

FIRST AID

First Aid Facilities are located in the Organisers Office.

FORKLIFT

For Health and Safety reasons only forklift trucks authorised by the Organisers will be allowed to work on the event site. If you require forklift facilities on site please log into your Exhibitor Area on www.holidayworldshow.com, or complete and return the form in this manual on page 28 and return to: shane@bizex.ie

FURNITURE HIRE

Please log into your Exhibitor Area on www.holidayworldshow.com, or complete and return the form in this manual and return to:
Business Exhibitions Limited, 59 Rathfarnham Road, Dublin D6W AK70
t: + 353 (0)1 295 7418, e: shane@bizex.ie
Contact: Shane Hourican, m: +353 (0)87 255 1675

HEIGHT RESTRICTIONS

Any Exhibitors planning to build a stand in excess of 2.5 metres must send detailed plans to the Organisers for their approval.

INSURANCE

Exhibitors are advised to take out adequate insurance cover against the kinds of risks they could incur in connection with the Show, especially

- Public Liability
- Employers Liability
- Personal Accident to Staff
- All Risks to
  a) Exhibitors property at Show
  b) Property on loan or hire to them

In addition, Exhibitors may wish to take out insurance for losses and wasted expenditure in the event of the Show being abandoned or curtailed.

It is possible that Exhibitors' existing policies will extend to cover them at the Show and verification of this should be obtained from the exhibitor's insurance company.

Ensure that any incident involving a possible claim on insurance is reported to the Organiser's Office as failure to do so could result in insurance companies refusing to meet claims.

FAQ's

MUSIC ON STAND

Exhibitors who intend having music on their stands, even for demonstration purposes only, should be aware that an Irish Music Rights Organisation Licence is nessessary in law to authorise such use of its international copyright musical repertoire. Licences can be obtained for the duration of the Show from the following at a charge to be determined by the Irish Music Rights Organisation.

IRISH MUSIC RIGHTS ORGANISATION
Pembroke Row, Lower Baggot Street, Dublin D02 HW59
t: +353 (0)1 661 4844, e: info@imro.ie, w: www.imro.ie

NOISE

All exhibitors wishing to use recorded or live presentations should submit a detailed description of their planned activity for Show Management approval. Noisy equipment used in demonstrations should be operated intermittently. Exhibitors may be requested to discontinue any noise which becomes objectionable to neighbouring exhibitors and interferes with the effectiveness of their exhibits.

ORGANISERS OFFICE

The Organisers Office will be located at the front of the hall. **On your arrival please call to this office to collect your Exhibitors Pack which will contain exhibitor badges and other relevant event information.**

PARKING

Exhibitor parking will be located opposite the main public entrance of the venue. A **Car Park Pass** is required to access the RDS grounds during the build-up period, and an Exhibitor Badge is required to enter the exhibition hall. The designated exhibitor entrance is located on the side of the hall opposite Simmonscourt Road.

Please note:
In accordance with new RDS regulations, free parking is only available to exhibitors/contractors during build-up days.
For event days, car park passes must be purchased directly at the gate from the RDS at a daily rate of €10 per vehicle.
Sleeping overnight in vehicles is strictly prohibited. Illegally parked exhibitor vehicles may be towed, and towing charges will apply.

POST SHOW FOLLOW-UP - TURNING LEADS INTO SALES

Plan for your post show follow-up and put all the pieces of your plan in place before you leave for the show. Studies reveal that 80% of exhibitors do not follow up, so take your competitors' customers and increase your show's Return on Investment!

Sort your leads according to their business potential (A, B or C leads) or type of information requested. Hold your staff accountable by requiring a written record of each lead's status.

Research also shows that 50% of attendees who passed your stand without stopping nonetheless took away an impression of your exhibit. Keep show information on your internet site for three months after the event.

FAQ's

4 OPTIONS TO PRE-PROMOTE YOUR PRESENCE AT THE SHOW

1. **SHOW SUPPLEMENT:**

We will be producing an Official Show Supplement, printed in-paper in advance of the Show and also available to Show-goers. We want you to make the best opportunity so, if you have

• a newsworthy story (with support photos) about your destination or service
OR
• a competition prize you'd like to give away (aside from any on your stand)
...we'd urge you to get in touch with Holiday World Dublin's PR Consultants, Limelight Communications ASAP (see contacts below). Space is first come first served, but as a guide consider **Friday 18th December 2026** the deadline for offers of editorial submissions/prizes for the Supplement.

2. **MEDIA COMPETITION PRIZES:** Limelight Communications will also be happy to advise you on the exposure that the Sunday Independent can achieve for exhibitors who are prepared to offer significant (€1k) prizes for reader competitions for use whether in the Supplement or run of paper. Prizes of smaller values may still be welcomed by other media, with exposure offered in line with perceived retail value - here again Limelight Communications can help advise and help place on your behalf, without additional cost. Please ensure you contact them with any prize offers before the forthcoming festive holidays.
3. **ON-STAND PRIZES:** If you plan to give away a prize on your stand at the Show (rather than in the press, in advance), remember to provide Limelight Communications with your logo, stand number and a line or two about the prize so they can have it listed as early as possible on the Holiday World website. A link to the 'Dublin Prizes' web page will be shared via the Show's social media ahead of the event.
4. **SHOW PRESS OFFICE:** Do continue to keep Limelight Communications informed of any news you have right up to Show time. Even after the Supplement's deadline, the team can make use of news on the Show's digital platforms and in the event of hard news being announced, assist you in ensuring all relevant Media know about it. It is always advisable to make printed copies of recent news releases available for visiting media to the Show. Please note, printed Media Packs/Releases should be left into the Press Office by 9.30pm on Opening Day. We suggest a minimum of 20 per exhibitor.

LIMELIGHT COMMUNICATIONS
60 Grand Canal Street Upper, Dublin D04 P3F8
t: + 353 (0)1 668 0600
Contact: Ms. Kathryn Byrne, e: kathryn.byrne@limelight.ie

PUBLIC ADDRESS

The public address system is provided for the use of the Organisers and is not available to Exhibitors or Visitors except in emergencies.

PUBLICITY MATERIAL DISTRIBUTION

Exhibitors are not allowed to distribute leaflets, etc., anywhere within the Exhibition premises or grounds, except at their own stands, and they must not for this or any other purpose encroach upon the aisles or open spaces or do anything which may cause obstruction.

FAQ's

REMOVAL OF EXHIBITS

All portable exhibits, valuable items and any graphics or artwork required for future use, should be removed from the Hall immediately at official closing time in order to safeguard against theft. Special instructions will be issued to cover the late night break-down period.

UNDER NO CIRCUMSTANCES ARE EXHIBITORS PERMITTED TO REMOVE ANY GOODS FROM
THEIR STAND BEFORE THE SHOW CLOSES AT 5PM.

Exhibitors may re-stock their stands and service their equipment not later than 1 hour before Show opens. If they wish to remove any of their exhibits from the hall during the open days of the Show they must obtain written permission from the Organisers.

RISK ASSESSMENT

Exhibiting companies must submit a Risk Assessment to the Organisers for their approval and the Local Authority, please see page 33/34.

RULES AND REGULATIONS

Please see pages 35-38 in this manual for a complete list of Rules & Regulations.

SECURITY

Exhibitors are reminded that although the Organisers take every precaution to ensure the security of the Show, they or any of the contractors cannot take responsibility for losses or damage that occur during build-up, open hours or dismantle. Any items belonging to Exhibitors which are required for future use should be removed from the hall immediately after the Show closes.

Exhibitors who leave any exhibits or valuables, such as coats, wallets, purses, laptops or other electronic devices on their stand are strongly advised to arrange for a security guard to man their stand until the exhibits and valuables are removed from the hall.

Exhibitors are reminded that vehicles and their contents are at risk in the Car Park area and that, in particular, care should be taken not to leave vehicles with valuable contents unattended during build-up or at anytime during the Show.

Please ensure that any incident involving the loss of property is reported to the security or Organisers Office. Failure to do so could result in insurances companies refusing to meet claims.

Please check with your insurance company prior to build-up that your exhibits are adequately covered againt loss or damage while thay are at the exhibition or in transit.

SHELL SCHEME ADDITIONS

Please log into your Exhibitor Area onto **www.holidayworldshow.com**, or complete order forms in this manual and return to:

BUSINESS EXHIBITIONS LTD, 59 Rathfarnham Road, Dublin D6W AK70
Contact: Shane Hourican, m: +353 (0)87 255 1675
t: + 353 (0)1 295 7418, e: shane@bizex.ie

FAQ's

SHELL SCHEME STANDS

Included in the price of SHELL SCHEME STANDS are dividing walls (2.5m high), carpet, name panel and 150 watt spotlight per six square metres with a minimum of two spots per stand. Stands are constructed of modular framework in widths of 950mm. Stand furniture and power points are not included in the price.

SPACE-ONLY STANDS

Should you propose to build a stand with height dimensions of more than 2.5 metres, 2 scaled copies of the proposed plan must be submitted to the Organisers 30 days prior to the opening of the exhibition. Please note that approval for such plans must be agreed by the Organisers and such approval shall be notified in writing. Such stands may be built to a maximum of 4m.

SPACE-ONLY STANDS ADJOINING A SHELL SCHEME STAND

Any walls that are built above the height of the Shell Scheme Stand (2.5m) must be finished to an acceptable standard on both side of the walls.

SPONSORSHIP OPPORTUNITIES

There are a variety of different sponsorship opportunities available at the Show. Details of these opportunities are available on request from the Organisers.

STAND APPEARANCE

In general stands should not exceed 2.5 metres in height and all materials used must be inherently non-flammable. Access to essential hall services must be left clear and all divider walls must be backed-up and present a clean appearance from the aisles and any adjoining stands. In particular enclosed structures should be so designed as not to detrimentally effect surrounding stands or the entire lay-out.

Some stands contain permanent structural features, i.e. PILLARS and others may contain amendments based on operational requirements. Any such variations are generally shown on the stand layout and Exhibiting Companies should note that stands are bought as seen and/or described. If you require a detailed drawing of your stand please ask.

In the event of a space only exhibitor wishing to make use of a neighbouring exhibitor's shell scheme wall, he must first obtain permission from the Shell Scheme contractor.

STAND APPROVAL

It is important that space only Exhibitors submit 2 copies of their stand floor plans to the Organisers for approval one month before Show opens.

STAND BOOKING FORM

Completed Stand Booking Forms (which includes Shell Scheme Stand Name Panel) must be returned to the Organisers immediately after stand location and size is agreed.

FAQ's

STAND DRESSING

For quick and simple stand dressing it is best to use Velcro (hook & loop) fasteners. Simply apply the velcro tabs (male and female) to your graphic panel and fix directly to the stand walls. Velcro can be purchased in most stationers or art supply shops. You can also order some directly from O'Brien Expo e: tony@obexpo.ie and of course they will also have some available for sale on site. Double sided tape, glue or staples may not be used to fix graphics to the stand walls. For heavier panels constructed of plywood or chipwood, we strongly recommend the purchase of special mild-steel straps, supplied complete with nuts and bolts. These straps will allow you hang your own panels on top of the stand walls. These straps may be purchased from the furniture contractor, O'Brien Expo in advance of the show. Please contact O'Brien Expo directly e: tony@obexpo.ie.

Under no circumstances may any display be nailed or screwed on the basic walls. Also panels may not be damaged with permanent self adhesive stickers or lettering. Any lettering or vinyl applied must be removed after the exhibition. A charge of €100 per panel will be made to cover the replacement cost of any panels damaged.
If you have any queries regarding stand dressing,
please contact Tony at O'Brien Expo - e: tony@obexpo.ie, t: +353 (0)87 249 2489

SUB-LETTING

The Exhibitor shall not assign the Contract, sub-let, share with his site or stand or any portion of it without prior written consent from the Organisers. Similarly, without such written consent from the Organisers, no name other than that of the Company or firm which entered into the Contract with the Organiser may be displayed on the site or stand, nor may any literature in respect of goods other than those of the Exhibitor be displayed or distributed.

TAXIS

Taxi's are available by calling the following numbers:
+353 (0)1 628 9999 - Ballsbridge Taxis
+353 (0)1 478 3333 - VIP Taxis
+353 (0)1 437 2092 - Stillorgan Cab

TRADE & MEDIA DAY

PLEASE NOTE THE TRADE & MEDIA MORNING TIMES AND DATES FOR 2027.
Friday 22nd January 9.30am - 12.30pm Trade & Media Only
The Trade MORNING will be comprehensively promoted to Travel Agents throughout the country with free admission and special facilities provided.

TRAINING - HOW TO EXHIBIT

Maximise the power of exhibitions and make them work for you. Log onto www.holidayworldshow.com/Become-an-Exhibitor and view the 30 Secrets to Exhibiting Success on page 39 of this manual.

FAQ's

VALUE ADDED TAX

- If an Exhibitor from another European Member State has a valid VAT number your invoice will not be subject to VAT. **Please Note** your VAT number **must** be the one allocated to the company booking the stand.

- If an Exhibitor has not a valid EU VAT number please contact VATit, who will assist you in reclaiming the VAT charged on this event.
  For details contact: VATit, Tel: +353(0)87 646 1473
  email: info@vatit.com, www.vatit.com

WI-FI/BROADBAND

Free Wi-Fi at RDS

RDS offers a free Wi-Fi service for all visitors and exhibitors using the RDS-WIFI network. This service allows users to browse the internet, check emails and use social media applications such as Facebook, X etc. Access to the service requires a simple acceptance of terms and conditions of use. This free service is unsupported. There is no need to order. For secure services please complete the Order Form on page 29.

Holiday World Show DUBLIN

STAND BOOKING FORM 2027

PLEASE USE BLOCK CAPITALS

CATALOGUE DETAILS

Company Name | Stand No.

Address

Postcode

Contact Name | Job Title

t (incl. STD Code) | w

m | e

Letter under which you wish your company to be identified in alphabetical listing

Each partner represented on your Stand may have a SEPARATE CATALOGUE ENTRY.
Please copy this Form for EACH PARTNER and fill in this section.

Are you: Tour Operator/Travel Agent ☐ Cruise/Ferry ☐ Adventure Travel ☐ Wedding/Honeymoon ☐ Escorted Tours ☐ Home Holiday ☐ Camping Abroad ☐ Sun & Beach Holidays ☐ Golf Holidays ☐ Spa & Wellness ☐ 50+ Tourism ☐ City Breaks ☐ Hotels ☐ Tourist Organisation ☐ Bus/Coach/Car/Rail ☐ Airline ☐ Visitor Attraction ☐ Other (specify) _____

Region: Asia/Pacific ☐ Africa / Middle East ☐ Britian ☐ Australia ☐ Canada ☐ Europe/Mediterranean ☐ North America ☐ Northern Ireland ☐ Republic of Ireland ☐ South America ☐ The Americas ☐ USA ☐ Other (specify) _____

INVOICE DETAILS

PLEASE COMPLETE THIS INVOICE SECTION IF DIFFERENT FROM THE CATALOGUE DETAILS ABOVE

Company Name | Stand No.

Address

Postcode

Contact Name | Job Title

t (incl. STD Code) | w

m | e

STAND DETAILS & VAT

Purchase Order: _____

SPACE + SHELL €420 per metre²
SPACE ONLY €375 per metre²

PAYMENT SCHEDULE:
*50% Deposit is due upon booking
•Balance due 1/11/26

Stand Number	Total Metres	Metres Front	Metres Depth	Total €

VAT No: | or VAT @ 23% | TOTAL

PAYMENT OPTIONS

1. **CHEQUE & BANKERS DRAFT**
   Our Bank: AIB Bank, 60 Clonskeagh Road, Dublin 14, Ireland
   Cheques/Bankers Drafts: Please Make payable to Business Exhibitions Limited.
2. **ELECTRONIC TRANSFER IBAN: IE66 AIBK 9311 8713 0040 08 SWIFT: AIBKIE2D**
3. **CREDIT CARDS**

☐ Visa ☐ Mastercard | Amount

Card No | Expiry Date / | CCV Code

Cardholder Name | Signature | Date

STAND NAME PANEL (Shell Scheme Exhibitors Only)

We agree to take the stand detailed above in accordance with the Event Rules and Regulations, a copy is available upon request

Signature | Title | Date

HOLIDAY WORLD SHOW DUBLIN 2027

FURNITURE
Pre-payment Order

THE DEADLINE FOR ORDER & PAYMENT IS 1/12/2026

Exhibitors who do not return this form will NOT have furniture delivered to their stand

NO ORDERS WILL BE TAKEN ON SITE. THIS FORM MUST BE FILLED IN and returned with PAYMENT IN FULL

(including 23% VAT) in order to prevent possible delays in the set up of your stand

Send to: Shane Hourican, Business Exhibitions Ltd., 59 Rathfarnham Road, Dublin D6W AK70

t: +353 (0)1 295 7418 m: +353 (0)87 255 1675 e: shane@bizex.ie

EXHIBITOR DETAILS

STAND NUMBER

PLEASE COMPLETE IN BLOCK CAPITALS

Company Name

Mr/Ms/Mrs First Name Surname

Job Title

Invoice Address

Country e:

t: m:

DESCRIPTION	PRICE	QUANTITY	TOTAL
White Demo Counter 1m x 1m x 500mm & Stool	€230.00		
White Furniture Pack - Round Table & 3 Chairs	€155.00		
Beech Furniture Pack - 750 diam. round table + 3 beech veneer chairs	€141.00		
Executive Furniture Pack - 750 diam. round table + 3 blue upholstered chairs	€172.00		
Meeting Table - 750mm diam. white meeting table, chrome legs	€57.00		
Simple Chair - beech chair on chrome frame	€51.00		
Executive Chair - Upholstered chair on chrome frame	€65.00		
Poseur Set - pod table with 3 high stools	€240.00		
Volt Stool - Black/White on chrome frame	€68.00		
High Bar Stool - with back support on chrome frame (Black)	€69.00		
High Bar Stool - with back support on chrome frame (White)	€69.00		
High Bar Pedestal Table - Chrome Finish	€70.00		
Waste Paper Bin	€38.00		
Expo Trestle Table with 1 Chair	€126.00		
		VAT@23%	
		TOTAL	

CREDIT CARD DETAILS

☐ Visa ☐ Mastercard TOTAL € _____ CCV ☐☐☐

Card No ☐☐☐☐☐☐☐☐☐☐☐☐☐☐☐☐ Expiry Date ☐☐ / ☐☐

Cardholder Name _____ Signature _____ Date _____

Address _____

CHEQUES SHOULD BE CROSSED AND MADE PAYABLE TO: BUSINESS EXHIBITIONS LTD

HOLIDAY WORLD SHOW DUBLIN 2027

FITMENTS
Pre-payment Order

THE DEADLINE FOR ORDER & PAYMENT IS 1/12/2026
Exhibitors who do not return this form will NOT have fitments delivered to their stand
NO ORDERS WILL BE TAKEN ON SITE. THIS FORM MUST BE FILLED IN and returned with PAYMENT IN FULL (including 23% VAT) in order to prevent possible delays in the set up of your stand
Send to: Shane Hourican, Business Exhibitions Ltd.,
59 Rathfarnham Road, Dublin D6W AK70
t: +353 (0)1 295 7418 m: +353 (0)87 255 1675 e: shane@bizex.ie

EXHIBITOR DETAILS

STAND NUMBER

PLEASE COMPLETE IN BLOCK CAPITALS

Company Name

Mr/Ms/Mrs First Name Surname

Job Title

Invoice Address

Country e:

t: m:

DESCRIPTION	PRICE	QUANTITY	TOTAL
Wall Panel to match existing Shell Scheme - layout plan required	€90.00		
Lockable Door Section - forming 1m x 1m store - layout plan required	€360.00		
Simple Storeroom - curtain forming 1m x 1m store - layout plan required	€180.00		
Lockable Door Section - forming 2m X 1m store - layout plan required	€400.00		
Angled Shelf - 990m wide x 300mm deep	€60.00		
Flat Shelf - 990m wide x 300mm deep	€60.00		
Freestanding Literature Dispenser - 5 x a4 pockets	€115.00		
White Demo Counter - with storage and sliding doors, 1000 x 900 x 450	€200.00		
Low Wall Panel - 1300mm high	€70.00		
Painted Wall Panel - various colours	POA		
Fixing client's own display panel on site - price per 3 mtr wall banner	€285.00		
Fixing client's own display panel on site - price per mtr infill panel	€110.00		
		Sub Total	
		VAT@23%	
		TOTAL	

CREDIT CARD DETAILS

☐ Visa ☐ Mastercard TOTAL € CCV

Card No Expiry Date /

Cardholder Name Signature Date

Address

CHEQUES SHOULD BE CROSSED AND MADE PAYABLE TO: BUSINESS EXHIBITIONS LTD

HOLIDAY WORLD SHOW DUBLIN 2027

GRAPHIC ORDER FORM
Pre-payment Order

THE DEADLINE FOR ORDER & PAYMENT IS 1/12/2026
Exhibitors who do not return this form will NOT have fitments delivered to their stand
NO ORDERS WILL BE TAKEN ON SITE. THIS FORM MUST BE FILLED IN and returned with PAYMENT IN FULL (including 23% VAT) in order to prevent possible delays in the set up of your stand
Send to: Shane Hourican, Business Exhibitions Ltd.,
59 Rathfarnham Road, Dublin D6W AK70
t: +353 (0)1 295 7418 m: +353 (0)87 255 1675 e: shane@bizex.ie

EXHIBITOR DETAILS

STAND NUMBER

PLEASE COMPLETE IN BLOCK CAPITALS

Company Name

Mr/Ms/Mrs First Name Surname

Job Title

Invoice Address

Country e:

t: m:

DESCRIPTION	PRICE	QUANTITY	TOTAL
G2 Facia Wrap Graphic - per linear metre - installation & removal	€77.00		
G3 Graphic Infill Panel - mounted into system walls - per metre	€270.00		
G4 Graphic Counter Infill	€138.00		
G6 Solid Wall Banner Graphics - per 3 metres	€860.00		
G8 Solid Wall Overlay Graphics - per 3 metres	€1300.00		
Large Format Digital Printing	POA		
PX Lightwall	POA		
G11 Fixing Clients own display panels on site - G3 Infills	€110.00		
G12 Fixing Clients own display panels on site - G6 3 mtr Wall Banner	€240.00		
G13 Fixing client's own display panel on site - G8 3 mtr Solid Graphic	€280.00		
G14 Fixing Clients own display panels on site - G4 Counter Graphic	€65.00		
		Sub Total	
		VAT@23%	
		TOTAL	

CREDIT CARD DETAILS

☐ Visa ☐ Mastercard TOTAL € _____ CCV ☐☐☐

Card No ☐☐☐☐☐☐☐☐☐☐☐☐☐☐☐☐ Expiry Date ☐☐ / ☐☐

Cardholder Name _____ Signature _____ Date _____

Address _____

CHEQUES SHOULD BE CROSSED AND MADE PAYABLE TO: BUSINESS EXHIBITIONS LTD

HOLIDAY WORLD SHOW DUBLIN 2027

FURNITURE & GRAPHIC EXAMPLES



F1 - DEM COUNTER WITH STOOL
white demonstration counter with high stool
sliding doors and shelf (not lockable)
90cm high x 90 cm w x 45 cm deep



F2 - EXECUTIVE FURNITURE PACK
Table 90cm diameter with 3 chairs



F3 - EXPO FURNITURE PACK
round table 70cm with 3 expo chairs



F4 - POSEUR SET -
high bar table with 3 high back stools



F5- PREMIUM LOCKABLE COUNTER



F9 PC / TV BASE PLINTH
50cm w 60cm d x 100cm h



F10- EXPO TRESTLE TABLE
(150 CM X 50 CM)

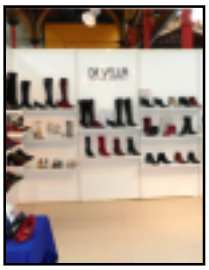

F5 - FLAT SHELVING
99cm wide x 30 cm deep in
white laminate finish - can be
continuous or individual



F11 -LOCKABLE DOOR / STOREROOM



F12 - LEAFLET DISPENSER
5 pocket freestanding

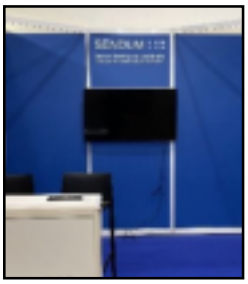

AV7 - WALL MOUNTED MONITOR PANEL



AV8- FREESTANDING MONITOR STAND



HOLIDAY WORLD SHOW DUBLIN 2027

SHELVING
Pre-payment Order

Exhibitors who do not return this form will NOT have shelves fitted to their stand
NO ORDERS WILL BE TAKEN ON SITE. THIS FORM MUST BE FILLED IN and returned with PAYMENT IN FULL (including 23% VAT) in order to prevent possible delays in the set up of your stand
Send to: Shane Hourican, Business Exhibitions Ltd.,
59 Rathfarnham Road, Dublin D6W AK70
t: +353 (0)1 295 7418 m: +353 (0)87 255 1675 e: shane@bizex.ie

EXHIBITOR DETAILS

STAND NUMBER

PLEASE COMPLETE IN BLOCK CAPI-

Company Name

Mr/Ms/Mrs First Name Surname

Job Title

Invoice Address

Country e:

t: m:

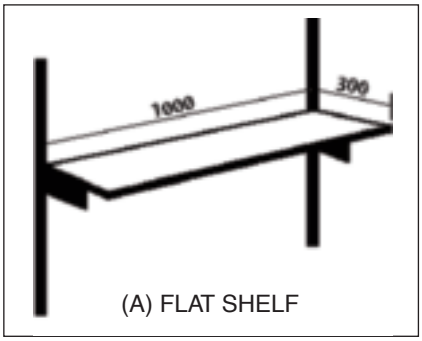

(A) FLAT SHELF

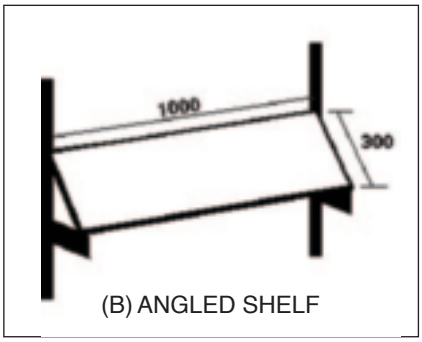

(B) ANGLED SHELF

N.B. It is important that you give the height from the ground to the base of the shelf.

Draw on this grid the plan of your stand indicating the position of the required shelves.

Please indicate whether Flat Shelves (A) in Red or Sloping Shelves (B) in Blue.

Units are in metre sq. blocks.

	1	2	3	4	5	6	7	8
1								
2								
3								
4								
5								
6								
7								
8								

	Cost per Metre	Quantity	Height from Ground	Total
(A) FLAT SHELVES	€60.00			
(B) SLOPING SHELVES	€60.00			
			Sub Total €	
			VAT @ 23%	
			TOTAL €	

CREDIT CARD DETAILS

Visa Mastercard TOTAL € CCV

Card No Expiry Date /

Cardholder Name Signature Date

Address

CHEQUES SHOULD BE CROSSED AND MADE PAYABLE TO: BUSINESS EXHIBITIONS LTD

HOLIDAY WORLD SHOW DUBLIN 2027

ADDITIONAL ELECTRICS ORDER FORM

Exhibitors who do not return this form will NOT have shelves fitted to their stand
NO ORDERS WILL BE TAKEN ON SITE. THIS FORM MUST BE FILLED IN and returned with PAYMENT IN FULL (including 23% VAT) in order to prevent possible delays in the set up of your stand
Send to: Shane Hourican, Business Exhibitions Ltd.,
59 Rathfarnham Road, Dublin D6W AK70
t: +353 (0)1 295 7418 m: +353 (0)87 255 1675 e: shane@bizex.ie

EXHIBITOR DETAILS

STAND NUMBER

PLEASE COMPLETE IN BLOCK CAPS

Company Name

Mr/Ms/Mrs First Name Surname

Job Title

Invoice Address

Country e:

t: m:

OPTION A - Shell Scheme Exhibitors - No fuse board required	PRICE	QUANTITY	TOTAL
13 Amp Double Socket (max load 1Kw)	€87.00		
LED Spotlight on Track (Each)	€55.00		
5' Fluorescent Tube Light	€56.00		
500W Q1 Floodlight	€90.00		
OPTION B - Space Only Exhibitors or Shell Exceeding 1Kw Load			
20 Amp Single Phase Mains (4Kw)	€110.00		
30 Amp Single Phase Mains (6Kw)	€125.00		
20 Amp Three Phase Mains (12Kw)	€161.00		
30 Amp Three Phase Mains (18Kw)	€170.00		
PLEASE PICK A MAINS OPTION FROM ABOVE AND THEN CHOOSE YOUR REQUIRED ELECTRICS			
13 Amp Double Socket	€87.00		
LED Spotlight on Track (Each)	€55.00		
5' Fluorescent Tube Light	€56.00		
16 Amp BLUE Ceeform Socket	€121.00		
32 Amp BLUE Ceeform Socket	€145.00		
16 Amp RED 3-Phase Ceeform Socket 5-pin	€180.00		
32 Amp RED 3-Phase Ceeform Socket 5-pin	€172.00		
1000 W QI Floodlight	€105.00		
24 Hour Connection (In addition to above)	€315.00		

Sub Total | VAT 23% | TOTAL

CREDIT CARD DETAILS

☐ Visa ☐ Mastercard TOTAL € CCV

Card No Expiry Date /

Cardholder Name Signature Date

Address

CHEQUES SHOULD BE CROSSED AND MADE PAYABLE TO: BUSINESS EXHIBITIONS LTD

ADDITIONAL ELECTRICS

Stand Layout & Order Instructions

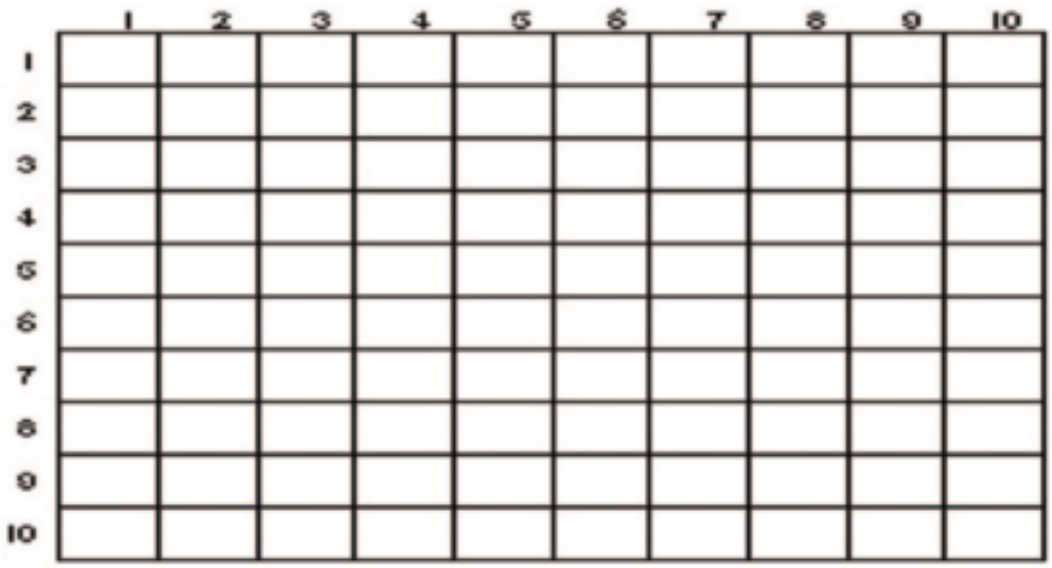

STAND LAYOUT

Draw on this grid the plan of your stand indicating the position of the required work or submit your own specific plans Untilise each square as 1 sq. metre.

Key:
I - wall
O - light
X - socket

ELECTRICAL ORDER INSTRUCTIONS

220 VOLT POWER SUPPLY

The cost of 13 amp 220-volt outlets includes delivery to one location in island stands and to one location at the rear of regular in block stands. If you require any outlets to be distributed to any other locations, please make sure you complete the order form along with the stand plan layout above, indicating outlet locations required.

HIGHER VOLTAGES

If you require off standard voltages or higher voltage services, please call for a quotation.

24 HOUR SERVICE

Eelectricity will be turned on within 30 minutes of show opening and off within 30 minutes of show closing, show days only. If you require power at any other time please order 24 hour power.

HOLIDAY WORLD SHOW DUBLIN 2027

TV/MONITOR
Pre-payment Order

THE DEADLINE FOR ORDER & PAYMENT IS 1/12/2026

Exhibitors who do not return this form will NOT have TV/Monitor delivered to their stand

NO ORDERS WILL BE TAKEN ON SITE. THIS FORM MUST BE FILLED IN and returned with PAYMENT IN FULL

(including 23% VAT) in order to prevent possible delays in the set up of your stand

Send to: Shane Hourican, Business Exhibitions Ltd.,
59 Rathfarnham Road, Dublin D6W AK70
t: +353 (0)1 295 7418 m: +353 (0)87 255 1675 e: shane@bizex.ie

EXHIBITOR DETAILS

STAND NUMBER

PLEASE COMPLETE IN BLOCK CAPITALS

Company Name:

Mr/Ms/Mrs: First Name: Surname:

Job Title:

Invoice Address:

Country e:

t: m:

CODE	DESCRIPTION	PRICE	QUANTITY	TOTAL
AV2	32” LED Flat Screen Monitor - (HDMI or USB connection only)	€388.00		
AV3	42” LED Flat Screen Monitor - (HDMI or USB connection only)	€460.00		
AV4	48” LED Flat Screen Monitor - (HDMI or USB connection only)	€520.00		
AV5	55” LED Flat Screen Monitor - (HDMI or USB connection only)	€610.00		
AV6	Wall Mount (Must be ordered with either G6 or G8 Graphic if stand adjoins another stand)	€205.00		
AV6a	Monitor Stand	€205.00		
AV7	DVD Player - (HDMI connection only)	€220.00		
Prices are for 3 day hire including delivery and collection			Sub Total	
			VAT@23%	
			TOTAL	



AV8 -WALL MOUNTED

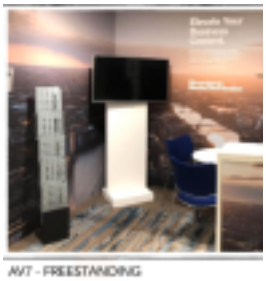

AV7 - FREESTANDING

CREDIT CARD DETAILS

☐ Visa ☐ Mastercard TOTAL € CCV

Card No Expiry Date /

Cardholder Name Signature Date

Address

CHEQUES SHOULD BE CROSSED AND MADE PAYABLE TO: BUSINESS EXHIBITIONS LTD

HOLIDAY WORLD SHOW DUBLIN 2027

WATER SUPPLY & PLUMBING
Pre-payment Order Form

THE DEADLINE FOR ORDER & PAYMENT IS 1/12/2026

TERMS OF PAYMENT: A cheque in full settlement must accompany all orders.
Please complete and return this form Immediately to:

A.N. O'Neill Ltd.
48c Robinhood Industrial Estate, Dublin 22.
t: +353 (0)1 276 7879 f: +353 (0)1 276 7873 m: +353 (0)86 257 2077
e: anoneill@gmail.com

EXHIBITOR DETAILS | STAND NUMBER

PLEASE COMPLETE IN BLOCK CAPS.

Company Name:

Mr/Ms/Mrs: **First Name:** **Surname:**

Job Title:

Invoice Address:

Country **e:**

t: **m:**

WATER SUPPLY AND PLUMBING

DESCRIPTION	PRICE	QUANTITY	TOTAL
Water & Waste Supply	€240.00		
Water Supply Only	€230.00		
Additional Water & Waste Supply	€115.00		
Additional Water Supply	€105.00		
Hire of Single Sink	€85.00		
Hire of Double Sink	€95.00		
Supply & Fit Undersink Water Supply	€115.00		
Supply & Fit Auto Pump for Waste	€115.00		
Hire of Portable Hand Wash Sink	€140.00		
		Sub Total	
		VAT@23%	
		TOTAL	

Please Note:
When ordering undersink water heater or a pump for waste, a separate electrical socket must be ordered.

HOLIDAY WORLD SHOW DUBLIN 2027

FLORAL DECORATION
Pre-payment Order Form

THE DEADLINE FOR ORDER & PAYMENT IS 1/12/2026

TERMS OF PAYMENT: A cheque in full settlement must accompany all orders.
We also accept Visa and MasterCard. Please complete and return this form to:
Mr Sam Smyth (Manager), Plant Life Unlimited, 110/111 Cork Street, Dublin 8
t: +353 (0)1 453 6201 f: +353 (0)1 454 2493 m: 086 257 9564 e: info@plantlife.ie
Or book online at www.plantlife.ie with clickplay.

EXHIBITOR DETAILS

STAND NUMBER

PLEASE COMPLETE IN BLOCK CAPITALS

Company Name:

Mr/Ms/Mrs: First Name: Surname:

Job Title:

Invoice Address:

Country: e:

t: f: m:

FRESH FLOWERS

DESCRIPTION	PRICE	QUANTITY	TOTAL	CODE
.5 metre Trough with Green Plants	€37.00			G050
.5 metre Trough with Coloured Plants	€37.00			C050
.75 metre with Green Plants	€44.00			G075
.75 metre with Coloured Plants	€44.00			C075
1 metre with Green Plants	€55.00			G100
1 metre with Coloured Plants	€55.00			C100
Circular Container with Tall Plant 1-2 metres high	€55.00			CM000
Circular Container with mixture of Plant	€55.00			CM001
Planting customer-designed troughs per running metre	€55.00			CD002
Bowl Arrangement with Mixture of Base Plants	€28.00			BA003
Planting Landscape Areas to be quoted separately				PLA004

If plants and containers are removed from stands, they will be charged at replacement prices. All prices include maintenance throughout period of Exhibition, delivery, installation and collection of container(s) at completion of Exhibition.

Sub Total	
VAT@23%	
TOTAL	

CREDIT CARD DETAILS

☐ Visa ☐ Mastercard TOTAL € CCV

Card No Expiry Date /

Cardholder Name Signature Date

Address

CHEQUES SHOULD BE CROSSED AND MADE PAYABLE TO: PLANT LIFE UNLIMITED

HOLIDAY WORLD SHOW DUBLIN 2027

FORK LIFT FACILITIES
Pre-payment Order Form

THE DEADLINE FOR ORDER & PAYMENT IS 1/12/2026 - PLEASE RETURN TO:

Shane Hourican
t: +353 (0)1 291 3706 f: +353 (0)1 295 7417
e: shane@bizex.ie

Please ensure that you fill in the LENGTH/HEIGHT/WIDTH column below

Company Name:

Address:

Contact: **Stand No:**

e: **t:**

m:

Access to the hall will be restricted once the stands are in place. It is therefore, important that any exhibits, crates or other deliveries requiring fork lift facilities are put in place on the stand as soon as possible to avoid congestion.

QUANTITY	DESCRIPTION	LENGTH/WIDTH/HEIGHT	WEIGHT/KG Max 2500kg
ARRIVAL DAY	**TIME (Approx.)**	**DEPARTURE DAY**	**TIME (Approx.)**

Payments may be made by Cheque, Credit Card or Bank Transfer and must be accompanied with this form - Cheques may be made payable to Business Exhibitions Ltd.

CHARGES (INCLUDING PLACING ON STAND AND OFF STAND WHEN EXHIBITION IS OVER)

1 - 2 Lifts	€80.00 plus VAT@23%	TOTAL inc. VAT €
3 - 4 Lifts	€152.00 plus VAT@23%	TOTAL inc. VAT €
5 - 6 Lifts	€205.00 plus VAT@23%	TOTAL inc. VAT €
7 - 10 Lifts	€330.00 plus VAT@23%	TOTAL inc. VAT €
Additional Lifts (per lift)	€30.00 plus VAT@23%	TOTAL inc. VAT €

CREDIT CARD DETAILS

☐ Visa ☐ Mastercard TOTAL € CCV

Card No Expiry Date /

Cardholder Name Signature Date

Address

NO LIFTS WILL BE UNDERTAKEN UNTIL PAYMENT HAS BEEN RECEIVED

Important: Please ensure that a representative of your company is present to accept delivery of goods requiring Fork Lift facilities and remains present throughout the lifting process.

HOLIDAY WORLD SHOW DUBLIN 2027

WI-FI / INTERNET
Pre-payment Order Form

RDS offers a free Wi-Fi service for all visitors and exhibitors using the RDS-WIFI network. This service allows users to browse the internet, check emails and such as Facebook, Twitter etc. Access to the service requires a simple acceptance of terms and conditions of use. This free service is unsupported. There is no need to order.

PLEASE COMPLETE THIS FORM AND RETURN WITH FULL PAYMENT

Shane Hourican, Business Exhibitions Ltd.,59 Rathfarnham Road, Dublin D6WAK70
t: +353 (0)1 295 7418 m: +353 (0)87 255 1675 e: shane@bizex.ie

Company Name:	
Stand No:	
Address:	
Contact Name:	
Email:	
Telephone / Mobile No:	

Service Description	Cost	No.	Sub-Total	Vat@ 23%	TOTAL
Wi-Fi - 100mb Dedicated & Secure Suitable for form completion, general browsing, android base till systems. No of Devices: 1 - 10	€250				
Wi-Fi - 300mb Dedicated & Secure Suitable for video streaming, online gaming, download large files, VR Headsets, Registration IPTV. No of Devices: 11 - 25	€600				
Wi-Fi - 500mb Dedicated & Secure Suitable for high resolution streaming/video conferencing. No of Devices: 26 - 100	€750				
Cable Drop and Switch Up to 1GB dedicated & secure wired connection with switch to connect up to 5 devices	€1,100				

HOLIDAY WORLD SHOW DUBLIN 2027

RIGGING
Pre-payment Order Form

Please complete this form and return it with payment to:

Emerald Isle Rigging, Unit 4 Cornerpark Farm, Peamount Road, Newcastle, Co Dublin
t: +353 (0)1 539 2778, e: niall@emeraldislerigging.ie

Each Drop Bar (inc. 2 wires) costs €450 + VAT - Extra Drop Wires cost €125 + VAT*.
Rigging will NOT be done unless payment is received prior to the event.

All rigging is done before the event and any banners to be hung are available for hanging at the venue.

Please send Payment* with Order Form. Payment must be received prior to the Event.

PAYMENT MAY BE MADE BY CASH, CHEQUE, VISA OR BANK TRANSFER

	Drop Bar(s) @ €450 each	Sub-Total	€
	extra Drop Wire(s) @ €125 each	VAT @ 23%	€
		Total	€

Visa	Mastercard	TOTAL €		CVC Code	
Card No				Expiry Date	/
Cardholder Name		Signature		Date	

Company Name: **Stand No(s):**

Address:

Contact **Signed:**

t: **m:**

Please fill out this section and mark clearly the position that you require on the grid. Clearly mark the position and orientation of the point/bars, as it may not be possible to move them when the exhibition is being built up. Units are in m2 blocks.

	1	2	3	4	5	6	7	8	9	10
1										
2										
3										
4										
5										
6										
7										
8										
9										
10										

TERMS AND CONDITIONS FOR EXHIBITORS DISTRIBUTING FOOD AND BEVERAGE PRODUCTS FOR SAMPLING AT AN EVENT

1. **RDS Rules and Regulations**
   The RDS retains the sole rights for the sale or distribution of any article of food, drink or tobacco through such catering contractor or contractors as the RDS may nominate from time to time.

2. **Need for Sampling**
   The RDS recognises the need for marketing and sampling product at exhibitions and in this regard may approve sampling to event attendees in a controlled manner. The RDS may reasonably refuse a request to sample and will communicate any such reasons to the event organiser.

3. **Notice**
   The event organiser must provide to the RDS Hospitality Services Manager completed application forms for approval at least 3 days prior to the event start date. Applications received after this deadline may not be considered and risk being rejected.

4. **Sampling Sizes**
   The below maximum sample sizes will only be permitted:
   - Soft Drinks / Beers / Ciders - 50ml
   - Wine/Fortified Wine/Champagne/Alcopops and similar – 25ml
   - Spirits and similar - 5ml
   - 'Single bite size' portions of food only **(requires event-specific HSE Food Business Registration – see link below)**
   - Individually wrapped chocolates and sweets

5. **Health and Safety**
   It is the responsibility of the event organiser to ensure that exhibitors comply with Health and Safety and Food Safety Regulations and to ensure exhibitor compliance with government guidelines to restrict the spread of infectious diseases (e.g. Covid-19). Any sampling deemed to be in breach of these regulations will be ceased with immediate effect. With the exception of alcoholic beverages, soft drinks and individually wrapped sweets / chocolates, exhibitors looking to sample foods must register with the HSE for the specific event by completing the online form available at: https://ehonline.hse.ie/
   A copy of this completed form must be available for inspection for the duration of the event

6. **No Charge**
   Sample portions will be distributed free of charge.

7. **Exit Samples**
   Samples of products in portions larger than those listed at point 4 above may be distributed for off-site consumption only. The distribution of these items must be organised in such a manner as to ensure they are not returned to the venue. Where this cannot be guaranteed, the RDS will refuse exit sampling. Requests for exit sampling are subject to the same approval process as on-site sampling.

8. **Alcohol**
   If sampling alcoholic beverage, the exhibitor must ensure that samples are not distributed to those under 18 years of age. Proof of age must be produced where necessary. If there is doubt about the customer's age and no proof of age is available, then samples must not be given. Only 1 sample portion per customer may be distributed at any event. Any necessary licence requirement in this regard, is the responsibility of the organiser.

9. **Breach of Conditions**
   Should an organiser or exhibitor breach the above terms, the RDS will have the offending exhibit/s cease carrying on business at the event, in whatever manner it deems appropriate.

APPLICATION FORM FOR PERMISSION FOR AN EXHIBITOR TO DISTRIBUTE FOOD OR BEVERAGE PRODUCT FOR SAMPLING / MARKETING PURPOSES

To be completed by the Event Organiser

Name of Event		Sampling Date(s)	
Event Organiser Name		Mobile No	
Stand / Exhibit Name		Stand / Exhibit Location	
Details of product/s requested for sampling:			
Portion size requested for sampling:			
Number of portions requested for sampling per event day:			
I, the event organiser, confirm that an event specific HSE Food Business Registration application form for this stand holder has been completed (required for food sampling only) YES ☐ NOT APPLICABLE ☐			
I, the event organiser, apply to the RDS on behalf of the above exhibitor, for permission to distribute free of charge, the product/s listed above, during the above event. I understand that only the product/s and quantities agreed with RDS may be distributed. I understand that failure to comply with the terms of sampling approval will result in sampling approval being revoked. Signed …… Date ……			
On behalf of the RDS Approved by…… Date…… Position ……			

This form should be emailed to:

Paolo Romeri
Hospitality Services Manager
RDS
Ballsbridge
Dublin 4 email: paolo.romeri@rds.ie

SPDoc0124

RISK ASSESSMENT FORM

This form **MUST BE** completed by all exhibitors applying for space at the Show.

Using the guidelines below, please consider the risk to those building and dismantling your stand(s) and to members of the public during the Show. Overleaf, outline the steps you propose to take to minimise that risk.

If you have any queries about completing the form overleaf, please contact the Organisers.

HAZARD Think about possible hazards which you could reasonably expect to result in significant harm.	**WHO IS AT RISK?** There is no need to list individuals by name - just think of groups of people who may be affected.	**ACTION TO CONTROL RISK** For the hazards listed, what precautions have you taken?
• Slipping & Tripping • Fire (flammable materials or electrics) • Chemicals (bleach or cleaningmaterials) • Moving parts of machinery • Work at height (ladders etc.) • Pressure systems • Vehicles, forklifts etc. • Electricity • Dust (from grinding etc.) • Fumes • Manual Handling • Noise	• Staff / visitors • Members of the public • Maintenance personnel • Contractors • Operators • Cleaners **Pay particular attention to:** • Staff with disabilities • Visitors • Inexperienced staff • Lone workers - they may be more vulnerable	• Meet the standards set by a legal requirement? • Comply with a recognised industry standard? • Represent good practice? • Reduce risk as far as reasonably practicable? **Have you provided:** • Adequate information, instruction or training? • Adequate systems or procedures?

COMPANY DETAILS: (this address and contact details will appear in the show catalogue and on invoices).

PLC ❍ Charity ❍ Sole Trader ❍ Partnership ❍ Limited ❍

Name of Business _____

Contact (Responsible Person) _____

Address _____

Post Code _____

Date Assessment Undertaken Signature of Assessor _____

Stand Number Items to be Displayed on Stand _____

RISK ASSESSMENT FORM

Likelihood of Happening

1 - Unlikely to happen.

2 - May occur at some time.

3 - Likely to occur at some time.

4 - Very likely to occur.

Extent of Possible Injury

1 - Remote possibility of harm.

2 - Slight injury, minor first aid.

3 - Some injury, not too serious.

4 - Serious injury or damage.

5 - Could cause death or serious injury.

Hazard	Likelihood of Happening	Extent of Possible Injury	Person at Risk	Controls to Minimise Risk
Slipping/Tripping	*2*	*2*	*Staff, General Public*	*Covered possible trip hazard or highlighted with fluorescent tape*

HOLIDAY WORLD SHOW DUBLIN 2027

RULES AND REGULATIONS

The Terms and Conditions contained in this Licence shall be deemed to form part of any contract made between APPLICANTS for stand space (hereinafter called 'Exhibitor') on the one part and THE ORGANISER having its registered office at 59 Rathfarnham Road, Terenure, Dublin D6W AK70 (hereinafter called "Organiser') of the other part.
(a) The Organisers empowered to grant Licences to Exhibitor's for stand space.
(b) The grant of a Licence for stand space to an Exhibitor shall be subject to and upon the terms and conditions and the Rules and Regulations as herein set out.

1.00 - DEFINITIONS
In this Licence and in these Rules and Regulations, the expressions which appear in the Definitions Schedule hereto shall have the meanings ascribed to them thereto.

2.00- LICENCE
2.1 Grant of Licence
The Organiser HEREBY GRANTS to the Exhibitor for the Licence fee stated in the Space Application Form and outlined in Clause 6 below the Licence set forth in Clause 2.2:
2.2 The Exhibitor shall have the exclusive right to stand space at the Exhibition in the position shown in the floor plan subject to the provisions of clauses 4.3 to 4.6 hereof inclusive. The Licence shall be for the period specified in the Space Application Form. The Exhibitor shall be a Licensee only and shall not have any estate, right or interest in the said stand space or any part thereof nor shall the relationship of Landlord and Tenant exist or arise or be deemed to exist or arise between the parties.
2.3 The Exhibitor shall have the right to market, promote, display and sell any of its products at the Exhibition which products shall have been first approved by the Organiser upon the application by the Exhibitor in the Space Application Form for the grant of the Licence.
2.4 The Exhibitor shall have the right to market, promote, display and sell any other products at the Exhibition whether as agent, distributor or otherwise, PROVIDED HOWEVER that the name or names of the said agent, distributor or otherwise on behalf of whom the Exhibitor wishes to market, promote, display and sell products shall be stated upon the Space Application Form by the Exhibitor.
2.5 The Organiser shall have the absolute right to require an Exhibitor to remove any products or exhibits at the Exhibition which have not previously been approved by the Organiser in accordance with Clause 2.3 and 2.4 hereof.
2.6 The Organiser shall have the absolute right to refuse an application for the Grant of a Licence for stand space at the Exhibition.

3.00 RULES AND REGULATIONS
3.1 Obligations of the Exhibitor
The Licence granted herein is subject in all respects to and must be exercised in accordance with the rules and regulations of the Exhibition as herein set out.
3.2 Public Authorities etc.
The Exhibitor shall comply with the requirements of all Public Authorities and the owners of the Exhibition premises.
3.3 Insurance
The Exhibitor shall effect and maintain at all times throughout the period of the Licence in an Insurance Office of repute the insurance cover specified at Clauses 3.4 and 3.5 hereof.
3.4 Third Party Claims The Exhibitor shall indemnify and hold harmless the Organiser with respect to all claims of, and liability to, third persons for injury, death, loss, or damage of any type arising out of or in connection with, the exercise of the Licence howsoever arising.
3.5 Exhibitors Staff & Exhibits at the Exhibition
The Exhibitor shall indemnify and hold harmless the Organiser with respect to all claims of, and liability to servants, agents, invitees or licensees of the Exhibitor howsoever caused and for the loss of or damage to Exhibits or to other property of the servants, agents, invitees or licensees of the Exhibitor, howsoever caused and shall maintain in force throughout the period of the Licence reasonably adequate insurance against the foregoing claims, loss and damage which the Exhibitor is obliged to insure against under this clause.
3.6 Exhibitor to Produce Policies of Insurance
The Exhibitor shall produce to the Organiser on request the policies in relation to the insurances specified in clauses 3.4 and 3.5 above together with evidence of payment of the premium in respect of the said policies.
3.7 Exhibitor to Notify
The Exhibitor agrees to provide prompt notice to the Organiser of any such claims which shall arise under clause 3.4 and 3.5 above.
3.8 Conduct of Exhibitors
The Exhibitor shall ensure that the stand is open to view and staffed by competent representatives during Exhibition hours. In the event of an Exhibitor failing to open the stand or to uncover Exhibits the Organiser may do so or arrange for the stand and Exhibits to be removed and the Exhibitor shall be liable for the costs and expenses incurred by the Organiser in respect of same.
3.9 The Exhibitor shall provide samples of products which are to be promoted and sold where appropriate and upon request to establish and confirm the quality, style and appearance of the products is in accordance with the standards set from time to time by the Organiser.
3.10 The Exhibitor shall ensure that the products promoted or sold where appropriate shall be of a high standard and not less than the quality, style and appearance of the approved samples stated at Clause 3.9 above.
3.11 The Exhibitor, its servants, agents, invitees or licensees shall conduct.themselves in a proper manner and shall not cause any nuisance or disturbance to any other Exhibitor or Exhibitors, employee or visitor or to the Organiser. Any person failing to behave himself in a proper manner may be removed from the Exhibition premises and refused re-admission during the period of the Exhibition.
3.12 The Exhibitor shall conduct its business only from its own stand and shall not, under any circumstances carry on business in any other part of the Exhibition premises.
3.13 Damage to Buildings
The Exhibitor shall not cause or permit any damage to the Exhibition premises or any part thereof or to any of the fixtures and fittings therein, and any such damage occurring during the Licence period in breach of its regulation shall immediately be made good by the Exhibitor, who shall reimburse the Organiser for such sums. Without derogating from the generality of the foregoing, no nails or screws shall be driven or holes drilled in the floors, walls, doors, pillars or other parts of the structure of the Exhibition premises.
3.14 Fire Precaution
The Exhibitor shall not do or permit any act to be done (upon the Exhibition premises) which may endanger the safety or stability of the premises, which may make void or voidable any in surance policy of the owners of the Exhibition premises and shall comply with the requirements of the Fire Officer or other relevant authority.
The Exhibitor shall observe the following provisions:
(i) Fire Proofing
All display materials shall be made from fire proofed materials to the satisfaction of the Fire Authorities. Cloth materials used in the decoration of stands must be non-flammable and stretched against solid backing.
(ii) Counter Backs and Curtains
Curtains shall be cut off at least 6 inches clear of the floor.
(iii) Inflammable Goods
The Exhibitor shall not store or place any inflammable dangerous or explosive substance, liquid or gas upon the Exhibition premises, but celluloid or articles mainly consisting of that material may be shown in glass show cases or otherwise protected from risk in an approved manner.
(iv) Naked Lights
No naked lights or lamps may be used during the period of the Exhibition or the periods of fitting up or dismantling, except where permission is given in writing by the Organiser after o btaining approval of the Local Authorities and owners of the Exhibition premises.
(v) Fire Extinguishers
An Exhibitor demonstrating shall erect in a permanent position on the stand an approved pattern fire extinguisher of two gallon capacity, complete with full working instructions and shall also be responsible for ensuring that at least two persons on the stand are familiar with and understand the use of such extinguisher, and are acquainted with the position of the nearest fire alarm station at the Exhibition premises.
(vi) Breach of Fire Precaution
An Exhibitor committing a breach of any of the foregoing clauses shall indemnify the Organiser for all claims, losses and damage caused in respect thereof.
3.15 Stand Cleaning and Aisles
The Exhibitor shall keep the aisles in front of the stand free from obstruction and ensure that the stand is maintained in a clean and tidy state throughout the Exhibition hours.
3.16 Operating Machinery or Exhibits
(i) Moving machinery shall, at the expenses of the Exhibitor, be installed and protected to the satisfaction of the Organiser and the owners of the Exhibition premises. If such machinery shall, in the opinion of the Organiser, be too noisy or cause annoyance to other Exhibitors or to visitors, it shall be switched off on request by the Organiser.
(ii) No motors, engines, furnaces, contravences or power driven machinery may be exhibited in operation without adequate protection against fire risk and without the written

permission of the Organiser. Such permission may be withheld or withdrawn at any time should such operating exhibits be of a nature likely to causes danger, annoyance or inconveniences to other Exhibitors or visitors.
(iii) Safety devices may be removed only when the machines are not in operation and not connected to the source of power and only for the purposes of showing a visitor the design and construction of the uncovered part or parts. In such a case, however, the safety devices which are removed must be placed immediately beside the machine.

3.17 Advertising
(i) All hand bills advertisements, photographs and printed matter are subject to the approval of the Organiser and the Exhibitor shall not paste or otherwise affix, exhibit or distribute advertisements anywhere in the building except on or from the Exhibitor's own stand.
(ii) The Exhibitor shall fully and effectively indemnify the Organiser against all costs claims, demands, proceedings and losses whatsoever made against or incurred by the Organiser as a result of the Exhibitor exhibiting or advertising any goods or service at the Exhibition.

3.18 Cinematography. Displays and Amplifiers
Cinematography, photographic slides, radio, television, video tapes, tape recorders, gramaphones or any form of sound amplification may not be used without the written consent of the Organiser and subject to the following conditions:
(i) Only non-inflammable film must be used and the project housing and covering must be of non inflammable material in accordance with the requirements of the Local Authorities and the owners of the Exhibition premises. Where sound film is used, adequate sound proofing must be carried out and any seating must be in accordance with the Local Authority regulations.
(ii) Details of final arrangements must be submitted to the Organiser for approval not later than one month before the opening day of the Exhibition and before any work is put in hand. The Organiser will not give permission for any installation which, in its opinion, may either cause annoyance to neighbouring Exhibitors or render the main public address system in the Exhibition premises inaudible. Should the Organiser consider the sound to be excessive, the Exhibitor undertakes to reduce the volume to an acceptable level or switch off completely if required.

3.19 Sales Promotion
(i) All efforts to advertise, promote sales and operate Exhibits must be conducted so as not to cause any annoyance or inconvenience to other Exhibitors and visitors.
(ii) All solicitations (in person or by any sound process) above the ordinary speaking tone of voice, any practice resulting in a complaint from an Exhibitor or visitor, which, in the opinion of the Organiser, exposes them to annoyance or danger are expressly prohibited.

4.00 - ORGANISERS OBLIGATIONS

4.1 Obligations of the Organiser
The Organiser shall use its best endeavour to obtain wide media exposure for the Exhibition. The Organiser shall not be held responsible for the failure of all or any other contracted exhibitor to attend the Exhibition or the failure of any number of attendees to attend the Exhibition for any reason beyond the reasonable control of the Organiser.

4.2 Stand Space
The Organiser shall provide the stand space granted by the Licence and defined by the floor plan, subject to the provisions of 4.3 to 4.6 hereof inclusive.

4.3 Alteration of space allotted
The Organiser shall have the right at any time and from time to time to make such alterations on the Floor Plan of the Exhibition as may in its opinion be necessary in the best interests of the Exhibition and may alter the shape, size or position of the space allowed to the Exhibitor. PROVIDED HOWEVER that if as a result of any such alterations by the Organiser the space allocated to an Exhibitor shall be reduced from the space originally allotted in the Floor Plan allowance will be made to the Exhibitor proportionate to the amount of space reduced. No alteration to the space allotted will be made in such a way as to impose any increase in the Licence fee payable by the Exhibitor.

4.4 Occupation and Completion of Site
The Exhibitor, its servants, agents, employees and contractors may enter the Exhibition premises for the purpose of erecting the stand and preparing Exhibits during the build up period of the Exhibition allowed by the Organiser. The Exhibitor undertakes that the site or stand will be ready, occupied and all Exhibits installed and arranged thereon for displays and all arrangements in connection therewith completed by 10.00 pm on the evening before the opening of the Exhibition.

4.5 The Exhibitor shall not be permitted to erect or occupy a stand or site until the Licence fee is paid. If an Exhibitor shall default in payments of the Licence fee, the Exhibitor shall be prohibited from occupying the site or stand and the stand or site shall be reallocated to a third party. The Exhibitor shall be liable for any expenditure incurred by the Organiser together with all losses incurred by the Organiser by reason of the Exhibitors failure to pay the Licence fee or any part thereof.

4.6 All exhibits and property of the Exhibitor must be removed from the Exhibition premises prior to the expiry of the Licence period. The Organiser shall have the right to remove and dis patch such Exhibits and property (at the risk and expense of the Exhibitor) to the address of the Exhibitor stated herein in the event of the Exhibitor failing to comply with this condition.

5.00 TERM

5.1 This Licence shall commence on the date specified in the Space Application Form.

6.00 LICENCE FEE

6.1 The Exhibitor shall pay to the Organiser the Licence fee together with Value Added Tax there on in the manner following: (i) 50% of the Licence fee upon the acceptance by the Organiser of the completed Space Application Form; and (ii) the balance shall be payable not less than six weeks before the opening of the Exhibition. If the Exhibitor shall default in making any of the said payments, the Licence shall be terminated forthwith by notice in writing from the Organiser to the Exhibitor. All sums paid shall be forfeited and the balance of the Licence fee shall become due and payable forthwith. Such termination shall not prejudice any rights or claims by the Organiser against the Exhibitor in respect of any antecedent breach.

7.00 TERMINATION

7.1 This Licence shall be terminated with immediate effect in the event that the Exhibitor shall commit a material breach of any of its obligations hereunder and shall not remedy such breach (if the same is capable of remedy) within 8 hours of being required by written notice so to do. For the avoidance of doubt it is hereby expressly agreed that breaches for which the Organiser shall be entitled to terminate this Licence forthwith on notice to the Exhibitor shall include without being limited thereto the following:
(a) If he acts in bad faith or otherwise engages in any conduct seriously prejudicial to this Licence, or the Organiser, or
(b) If he is guilty of fraud or misconduct, or
(c) If he, being an individual. becomes bankrupt or being a Company ceases to carry on business. has a receiver or administrator appointed over all or any part of its assets or under taking, enters into any composition or arrangement with its creditors or takes or suffers any similar action in consequence of a debt or other liability, or undergoes any process analogous to the foregoing in any jurisdiction throughout the world.
(d) If the Exhibitor becomes involved in a trade or industrial dispute whether such action be official or otherwise. the Organiser reserves the right to close without notice the stand or stand space that is involved either directly or indirectly in the dispute and to restrain the Exhibitor from occupying the stand space before, or for part or for the duration of the Exhibition and to terminate this Licence. The Organiser in such an event shall not be liable for any loss or damage consequential or otherwise occasioned by such action or shall not be liable to pay any compensation or refund any monies to the Exhibitor involved in the trade or industrial dispute.

7.2 All sums paid by the Exhibitor to the date of termination shall be forfeited and the balance, if any, due hereunder shall be payable forthwith. Termination of this Licence shall operate without prejudice to any rights which may have accrued to either party hereunder.

8.00 - CANCELLATION AND POSTPONEMENT OF EXHIBITION

8.1 Covid-19
(a) The Organiser shall be entitled (at its sole discretion) to terminate or reschedule the term of this Licence with immediate effect if a Covid-19 Public Health Event interferes with the performance of its obligations under this Licence.
(b) If the Licence is cancelled in full (and not rescheduled) due to a Covid-19 Public Health Event, the Exhibitor will be entitled to a full refund of the licence fee paid by the Exhibitor. If one or more days of the Exhibition (but not all of the days) are cancelled due to a Covid-19 Public Health Event, the Exhibitor will be entitled to a proportionate partial refund of the licence fee paid by the Exhibitor.
(c) If the Exhibition is rescheduled due to a Covid-19 Public Health Event, the Exhibitor's licence will remain valid for the rescheduled date of the Exhibition (subject to availability of capacity). If the Exhibitor notifies the Organiser within a specified deadline (and no later than 8 weeks before the rescheduled date of the Exhibition) that they no longer want to attend the rescheduled Exhibition, the Exhibitor will be entitled to a full refund of the licence fee paid by the Exhibitor.
(d) The Organiser shall be under no further liability to the Exhibitor in respect of any actions, claims, losses (including consequential losses), costs or expenses whatsoever which may be brought against or suffered or incurred by the Exhibitor, as a result of any full or partial cancellation of the Licence due to a Covid-19 Public Health Event.

8.2 Other Force Majeure Events
If the Exhibition is abandoned for any reason (other than a Covid-19 Public Health Event) which is an event of force majeure (more particularly defined at clause 10.3 hereof) or if the Exhibition premises shall become wholly or partially unavailable for the holding of the Exhibition for whatsoever reason, not within the control of the Organiser, whether ejusdem generis or not (but excluding if as a result of a Covid-19 Public Health Event), the Organiser at its entire discretion may repay the licence fee paid by the Exhibitor, or part thereof, but shall be under no obligation to repay the whole or part of such rental and shall be under no liability to the Exhibitor in respect of any actions, claims, losses (including consequential losses), costs or expenses whatsoever which may be brought against or suffered or incurred by the Exhibitor, as a result of the happening of any such events.

9.00 - LIMITATION OF LIABILITY

9.1 Notwithstanding anything in this Licence to the contrary insofar as the Exhibitor may have any claim from damages against the Organiser at law, the same shall preclude damages for indirect or consequential loss and in the case of the other damage to which legal liability is established subject to the terms of this Licence the Organisers liability shall be limited to:

9.2 The repayment of all sums then paid to the Organiser by the Exhibitor which have not already been spent or incurred or accrued by the Organiser so that it can not avoid such expenditure without itself being in breach of contract.

9.3 Return all Exhibitor products not consumed or which have not been legally committed to be consumed so that such consumption cannot be avoided by the Organiser without itself being in breach of contract.

10.00 -FORCE MAJEURE

10.1 If by any reason of any event of force majeure either of the parties to this Licence shall be delayed in or prevented from, performing any of the provisions of this Licence then such delay or non performance shall not be deemed to be a breach of this Licence and no loss or damage shall be claimed by either of the parties hereto from the other by reason thereof.

10.2 Should the exercise of the rights and obligations under this Licence be materially hampered, interrupted or interfered with by reason of any event of force majeure, then the obligations of the parties shall be suspended during the period of such hampering, interference or interruption consequent upon event or events and shall be postponed for the period of time equivalent to the period or periods of suspension, and the parties hereto will use their best endeavours to minimise and reduce any period of suspension occasioned by any of the events aforesaid.

10.3 The expression “an event of force majeure” shall mean and include fire, flood, casualty, lock-out, strike, labour disputes, industrial action of any kind, unavoidable accident, break down of equipment, national calamity or riot, act of God, pandemic, epidemic, public health advice, the enactment of any act of An Oireachtas or the act of any other legally constituted authority, any cause of event arising out of attributable to war, or any other cause or event (whether of a similar or dissimilar nature) outside the control of the parties hereto other than a shortage or lack of money.

11.00 - GENERAL PROVISIONS

11.1 No Assignment

The Exhibitor may not assign the benefit of this Licence without the prior consent in writing of the Organiser.

11.2 Copyrights, Patents, Trademarks, Passing Off

The Organiser shall not be liable for any damages to the Exhibitor, its servants or agents may sustain in respect of the infringement of any of its copyrights, patents or trademarks arising out of its participation in the Exhibition. It shall be a matter for the Exhibitor to protect new inventions or designs before exhibiting same. The Organiser shall not be liable for any damages the Exhibitor, its servants or agents may sustain as a result of a Passing Off by another Exhibitor in the Exhibition. It shall be a matter for the Exhibitor to protect its proprietary rights to its goodwill.

11.3 Payment of Music or Film Royalties

The Exhibitor shall obtain an appropriate Licence if it proposes to have music or show films on its stand whether for demonstration purposes or otherwise and it shall indemnify the Organiser against any claim for non-payment of Royalties in respect of any sums due to any organisation or body that is empowered to collect Royalties for music or film.

11.4 Rights of the Organiser and Owners of the Exhibition Premises

The Organiser and owners of the Exhibition premises and those authorised by them respectively shall have the right to enter the Exhibition premises at any time to execute works, repairs, and alterations and for any other purposes.

11.5 Failure of Services

The Organiser shall use its best endeavours to ensure the supply of the services of the owners of the Exhibition premises or other suppliers and of those mentioned in the Exhibitors Manual, but as the supplies of such services are not within the control of the Organiser, it shall not incur any liability to the Exhibitor for any loss or damage if any such service shall wholly or partly fail or cease to be available nor shall the Exhibitor be entitled to any allowance in respect of sums due or paid under this Licence.

11.6 Administration to the Exhibition

The Organiser shall have the right in its absolute discretion to exclude or remove from the Exhibition any person whose presence is or is likely to be undesirable and the Organiser may exercise such rights notwithstanding that any person is the servant or agent of the Exhibitor or otherwise in any way connected or associated with the Exhibitor.

11.7 Construction and erection of stands and offices

Shell Stands

(a) Where Shell stands are provided by the Organiser, they shall be in accordance with the specification and conditions governing all additional constructional work contained in the Exhibitors Manual.

Space only sites

(b) All stands on space only sites shall be subject to the prior approval of the Organiser which must be obtained at least 28 days prior to the commencement date of the Exhibition.

(c) The Organiser shall have the right to issue an official catalogue. The Organiser shall not accept responsibility for any omissions, misquotations or other errors which may occur in the compilation of the catalogue.

11.8 Notices

Notices given hereunder or to be served by either of the parties hereto on the other may be made by delivering same by hand or by sending the same through the post in a pre-paid letter addressed to the relevant party hereto at its respective address aforesaid. If delivered by post shall be deemed to be served on receipt and in any event no later than 5 working days after the time of posting and in proving such services, it shall be sufficient to show that the letter containing the notice was properly addressed, stamped and put into the Post Office. If delivered by hand, it shall be deemed to be served when handed to the other party.

11.9 No Variation

The term of this Licence shall not be varied nor the Licence terminated orally and none of the terms hereof shall be deemed to be waived or modified except by an express agreement in writing signed by the party against whom such waiver or modification is sought to be enforced.

11.10 Licence and Rules and Regulations

This Licence and the Exhibitors manual constitutes the entire agreement between the parties regarding the subject matter hereof as at the date hereof all prior understanding (oral or written) if any having been superseded thereby.

11.11 General Lien

All Exhibits are subject to a General Lien in favour of the Organiser for all sums whether for unpaid Licence fees or otherwise due from an Exhibitor to the Organiser.

11.12 Waiver

A waiver by the Organiser of any breach by the Exhibitor of any of the terms and conditions contained in this Licence or of any of the Rules and Regulations herein contained or the ac quiescence of the Organiser in any act (whether of commission or omission) which but for such acquiescence would be a breach as afore said, shall not constitute a general waiver of such terms, provision, condition, rule, regulation of or any subsequent act contrary thereto.

11.13 Governing Law

This Licence and the Rules and Regulations contained herein shall be governed by and construed in accordance with the laws of the Republic of Ireland and each of the parties hereto irrevocably submits to the non-exclusive jurisdiction of the High Court of Ireland.

12.00 - PAYMENT TERMS

12.1 Payment by the Exhibitor will be due as to half within four weeks from the date of the Order and as to the remainder on or prior to the date eight weeks before commencement of the Exhibition.

13.00 -EXHIBITOR CANCELLATION

13.1 Cancellation by the Exhibitor will only be effective if sent by mail to the Organiser at its address on the Order Form. In the event of cancellation, the Organiser may arrange for the space to be provided to another exhibitor and the following cancellation charges will apply:

Cancellation notice received prior to the date 8 weeks before commencement of the Exhibition: half of payment due.

Cancellation notice received on or after the date 8 weeks before commencement of the Exhibition: full payment due.

It is agreed that the cancellation charges are a genuine estimate of the Organiser’s resulting costs and losses.

SCHEDULE

Definitions:

"Exhibit"	The property of the Exhibitor which is used for the Promotion ol the Exhibitors Products.
“Exhibition premises"	The Premises referred to in the Space Application Form;
"Exhibitors manual"	The manual provided for each Exhibitor;
"Floor Plan"	The stand space defined in the Plan contained in the Exhibitors manual,
"Insurance"	The insurance to be taken out by the Exhibitor for the benefit of the Exhibitor and the Organiser covering third party claims and the Exhibitors staff and Exhibits at the Exhibition
“The Licence"	The Exhibition Licence granted by the Organiser to the Exhibitor for the Period specified in the Space Application Form.
"Licence Fee"	The fee Payable by the Exhibitor and stipulated in the Space Application Form.
"Product"	The Products and services displayed by the Exhibitor.
"Rules and Regulations"	The rules and regulations contained in this Licence; Space Application Form" the form to be completed by the Exhibitor when applying to the Organiser for a Licence for stand space
"Stand/Stand Space"	The stand space Provided in accordance with the floor plan as defined in the Exhibitors manual.
“Covid-19 Public Health Event”	Any law, restriction or action made, imposed or taken by a government in response to COVID-19.

30 Secrets to Exhibiting Success

1. On average 75 per cent of visitors to an exhibition are there to buy or plan to buy in the future.
2. Exhibiting is the most cost effective way of getting your products and services in front of customers.
3. Exhibiting is the only medium which allows you to interact with potential customers, using all the five senses.
4. Decide why you are exhibiting and what you wish to achieve. Have some specific, measurable targets in mind. For example, get 300 qualified sales leads or conduct 50 research interviews.
5. Design your stand to help deliver your objectives.
6. Have one person in charge of every aspect of the exhibition.
7. 80 per cent of stand success is down to staff, so train them.
8. If you can invite people, do. If you don't your competition will.
9. Formulate a plan to categorise leads for follow up.
10. At the show, let people know you are there, advertise.
11. Don't ask closed questions.
12. Keep your conversations with clients short and concise.
13. Turn off your mobile phone.
14. Focus, get all the details you can from your prospect.
15. Make a rota, so everyone knows where he or she is and what he or she is doing, when.
16. Make eye contact and smile.
17. Listen to your prospect and sell benefits not features. For example, this is good for you because...
18. Go for it! Have staff whose presence says "Hi, how are you?".
19. You and your staff need to look fresh and feel fresh.
20. Use all five senses to attract people to your stand.
21. Have daily team debriefs.
22. Classify all leads.
23. Don't eat whilst on the stand.
24. Don't get into conversations about products you do not know, ask another team member to help/demonstrate.
25. Remember why you are there, stay focused on your objectives.
26. Talk less listen more.
27. Conduct a show debrief with the stand team.
28. Follow up leads, you will need to contact them at least six times.
29. Make use of all the information you have gathered.
30. Book early for next year.