HOLIDAY WORLD SHOW 2019

SHELVING
Pre-payment Order Form

THE DEADLINE FOR ORDER & PAYMENT IS 14/12/18
Exhibitors who do not return this form will NOT have shelves fitted to their stand
NO ORDERS WILL BE TAKEN ON SITE. THIS FORM MUST BE FILLED IN and returned with PAYMENT IN FULL (including 23% VAT) in order to prevent possible delays in the set up of your stand
Send to: Shane Hourican, Business Exhibitions Ltd.,
59 Rathfarnham Road, Dublin D6W AK70
t: +353 (0)1 295 7418 m: +353 (0)87 255 1675 e: shane@bizex.ie

EXHIBITOR DETAILS | STAND NUMBER

PLEASE COMPLETE IN BLOCK CAPITALS

Company Name

Mr/Ms/Mrs First Name Surname

Job Title

Invoice Address

Country: e:

t: f: m:

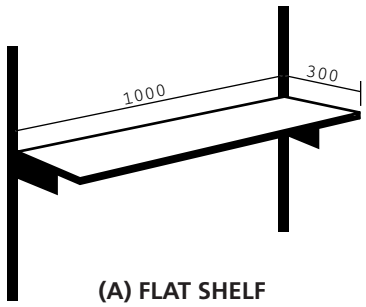

(A) FLAT SHELF

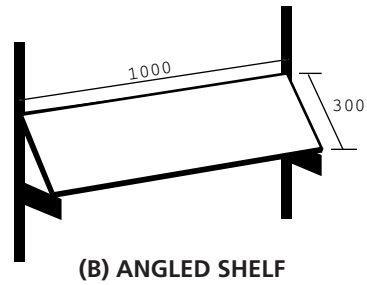

(B) ANGLED SHELF

N.B. It is important that you give the height from the ground to the base of the shelf.

Draw on this grid the plan of your stand indicating the position of the required shelves.

Please indicate whether Flat Shelves (A) in Red or Sloping Shelves (B) in Blue.

Units are in metre sq. blocks.

	1	2	3	4	5	6	7	8
1								
2								
3								
4								
5								
6								
7								
8								

	Cost per Metre	Quantity	Height from Ground	Total
(A) FLAT SHELVES	€32.00			
(B) SLOPING SHELVES	€38.00			
			Sub Total €	
			VAT @ 23%	
			TOTAL €	

N.B. DEADLINE FOR ALL ORDERS : 14/12/2018

CREDIT CARD DETAILS

☐ Visa ☐ Mastercard TOTAL € CCV

Card No Expiry Date /

Cardholder Name Signature Date

Address

CHEQUES SHOULD BE CROSSED AND MADE PAYABLE TO: BUSINESS EXHIBITIONS LTD